The Floorcare People

SPARE PARTS LIST

Victor SD50

IIC Products Ltd
T/A Victor Floorcare
Unit 15 & 16
Ace Business Park
Mackadown Lane
Birmingham
B33 0LD

sales@victorfloorcare.com
+44 (0)121 706 5771
www.victorfloorcare.com

2.0	FSC0480	Chassis assembly	SD50

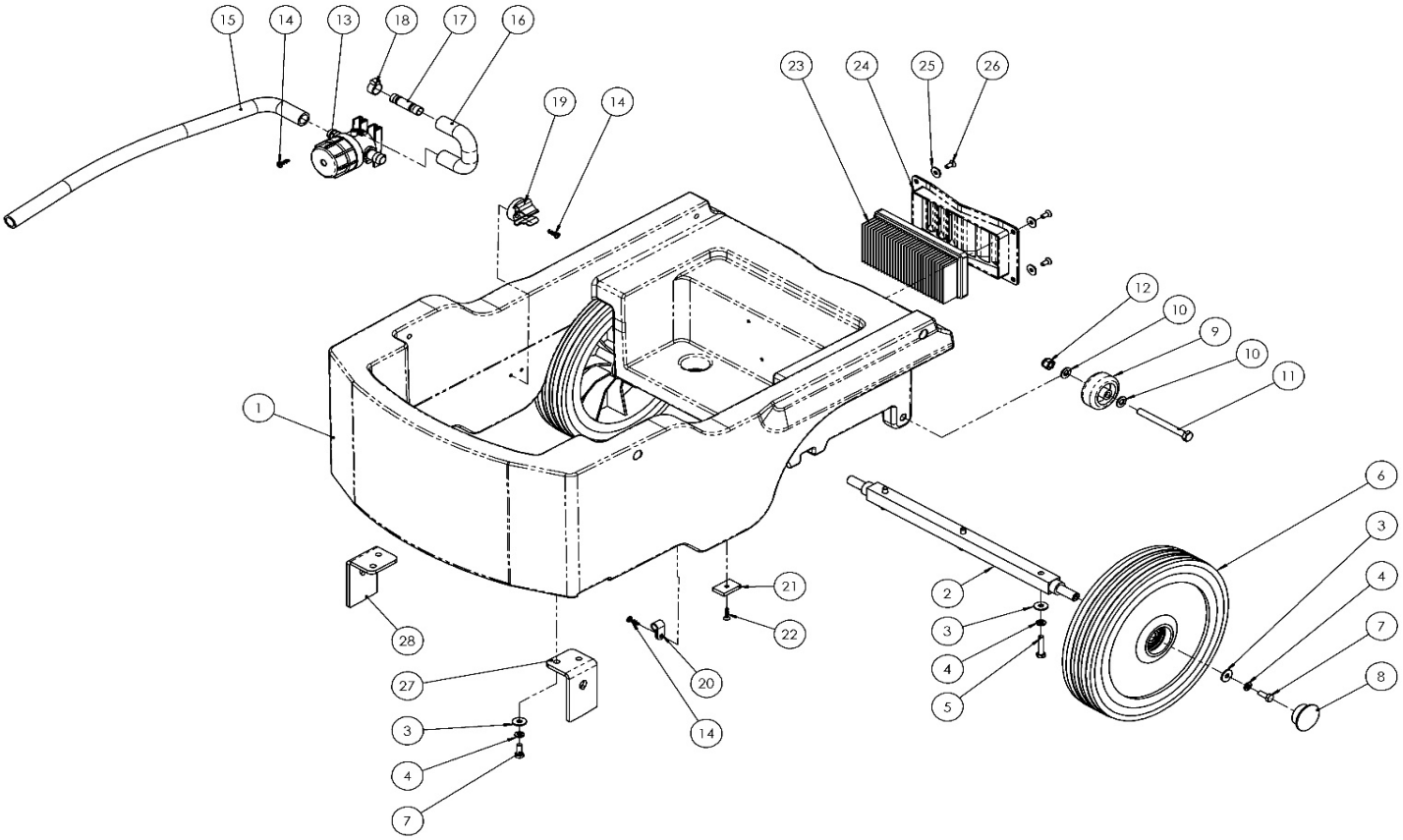

ID	Part number	Description	Quantity	
1	FSC0640	Chassis 40 litres	1	
2	FSC0670	Wheel axis 40 litres	1	
3	FSC0400	Washer large 6x18 A2	9	
4	FSC0060	Grower washer d.6	9	
5	FSC0800	Hexagon screw M6x30	3	
6	FSC0600	Ruota con cuscinetti d.250x50	2	
7	FSC0520	Hexagon screw M6x16	6	
8	FSC0030	Wheel cap	2	
9	FSC0230	Wheel d.50x24	2	
10	FSC0130	Washer d.8	4	
11	FSC0660	Hexagon screw M8x85	2	
12	FSC0020	Selflocking nut M8	2	
13	FSC0020	Water filter	1	
14	FSC0690	Screw TC 4x16	6	
15	FSC0750	Water hose L= 580 mm	1	
16	FSC0710	Water hose L= 280 mm	1	
17	FSC0040	Extension d.12	1	
18	FSC0330	Metal clamp 15x25	1	
19	FSC0190	Hose support 17-20	1	
20	FSC0280	Wire Mount 3/8"	2	
21	FSC0650	Magnet 30x20x5	2	
22	FSC0750	Screw TS 4x18	2	
23	FSC0660	Air filter	1	
24	FSC0150	Air flow discharging grid	1	
25	FSC0810	Washer for counterscrew M5	4	
26	FSC0460	Countersunk screw M5x12	4	
27	FSC0950	Brush head holder - left	1	
28	FSC0940	Brush head holder - right	1	

2.0	FSC0940	Brush head 28"	SD50

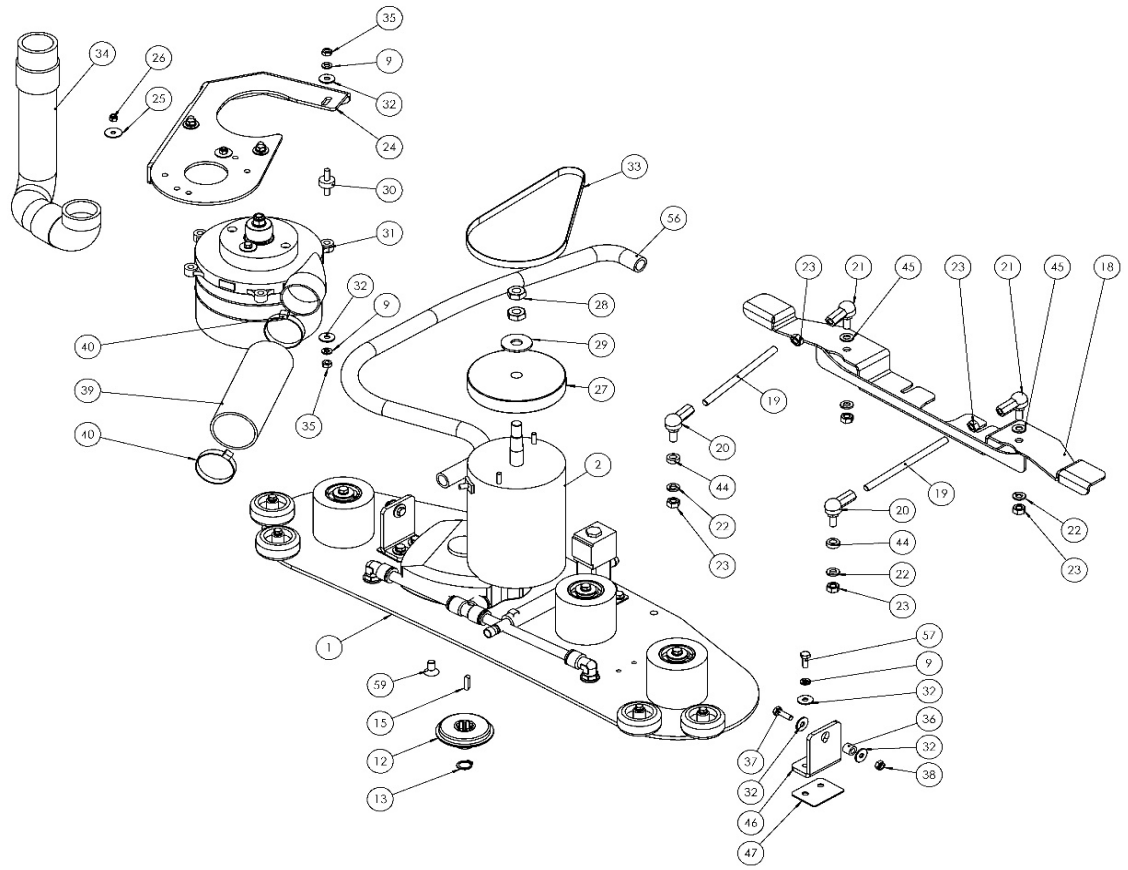

ID	Part number	Description	Quantity	
1	FSC1640	Brush deck 4x7"	1	
2	FSC0070	Gearbox motor 48V 500w	1	
3	FSC0590	Free shaft holder	3	
4	FSC0220	Ball bearing 6302-2RS	3	
5	FSC0280	Gasket for rotating shaft	3	
6	FSC0600	Free shaft	3	
7	FSC0610	Spacer 17x25x33.5	3	
8	FSC0140	Washer large d.6x24	3	
9	FSC0060	Grower washer d.6	15	
10	FSC0170	Hexagon screw M6x12	5	
11	FSC0090	Ball bearing 6203-2RS	3	
12	FSC0050	Brush holder - small	4	
13	FSC0800	Seeger 15 E	4	
14	FSC0460	Countersunk screw M5x12	13	
15	FSC0380	Shaft key 5x5x20 - A2	4	
16	FSC0230	Wheel d.50x24	4	
17	FSC0620	Spacer 8x6x28.5	4	
18	FSC1670	Squeegee holder	1	
19	FSC0570	Squeegee holder shaft	2	
20	FSC0640	Articuled head M8	2	
21	FSC0640	Articuled head M8	2	
22	FSC0110	Washer Grower d.8 A2 DIN 127	4	
23	FSC0670	Nut M8 A2 - DIN 982	6	
24	FSC2220	Suction unit holder	1	
25	FSC0190	Washer 5x20	2	
26	FSC0220	Selflocking nut M5	2	
27	FSC0720	Motor pulley	1	
28	FSC0790	Nut M12	2	
29	FSC0530	Washer d.12	1	

2.0	FSC0940	Brush head 28"	SD50

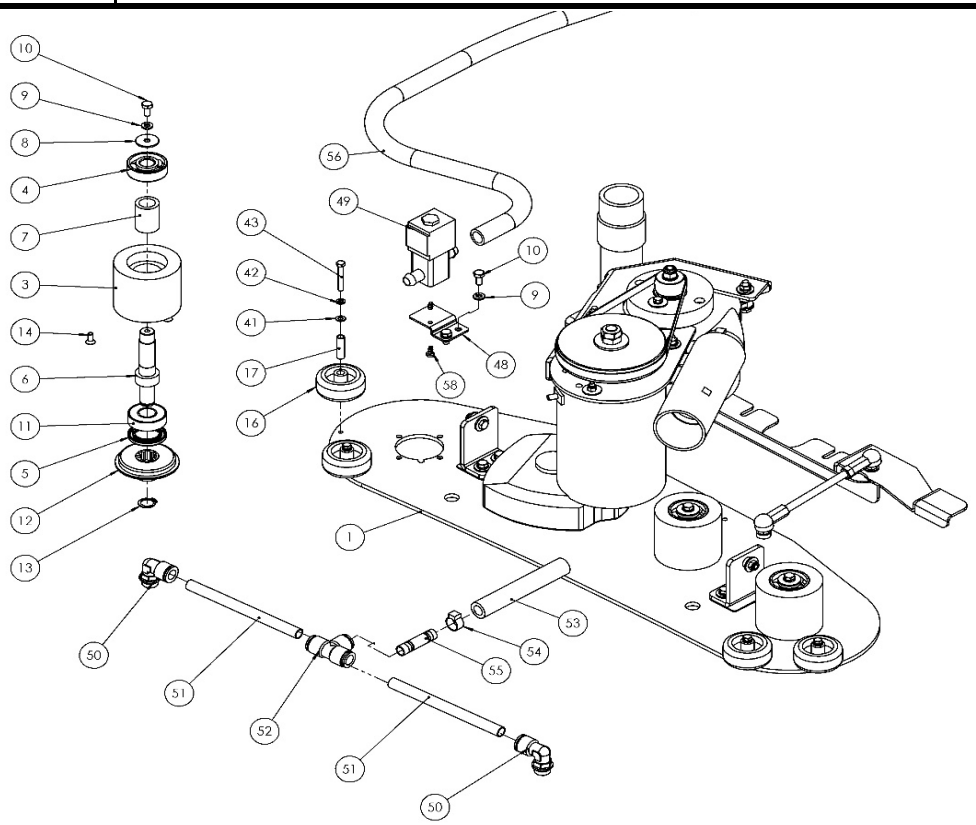

ID	Part number	Description	Quantity	
30	FSC0300	Shock absorber 18x7,5 MM6	3	
31	FSC0080	Suction turbine	1	
32	FSC0400	Washer large 6x18 A2	14	
33	FSC0590	Flat belt 530x10	1	
34	FSC0520	Depression hose	1	
35	FSC0350	Nut M6	6	
36	FSC0580	Spacer 6.5x12x10.5	2	
37	FSC0150	Hexagon screw M6x20	2	
38	FSC0300	Selflocking nut M6	2	
39	FSC0740	Air discharing hose, d50x160	1	
40	FSC0340	Metal clamp 32x50	2	
41	FSC0240	Washer d.5	4	
42	FSC0200	Grower washer d.5	4	
43	FSC0830	Hexagon screw M5x35	4	
44	FSC0520	Spacer 8.25x16x5	2	
45	FSC0130	Washer d.8	2	
46	FSC1660	Brush deck connection	2	
47	FSC1650	Connection reinforce	2	
48	FSC0590	Solenoid valve holder	1	
49	FSC0530	Proportional solenoid valve 24Vdc	1	
50	FSC0030	Elbow "L" 3/8" d.12	2	
51	FSC0820	Fresh water hose	2	
52	FSC0110	"T" elbow d.12	1	
53	FSC0830	Fresh water hose	1	
54	FSC0330	Metal clamp 15x25	1	
55	FSC0040	Extension d.12	1	
56	FSC0840	Fresh water hose	1	
57	FSC0520	Hexagon screw M6x16	4	
58	FSC0480	Screw for plastic 5x9,5	2	
59	FSC0970	Countersink screw M8x16	4	

2.0	FSC0950	Splashguard assembly 700mm	SD50

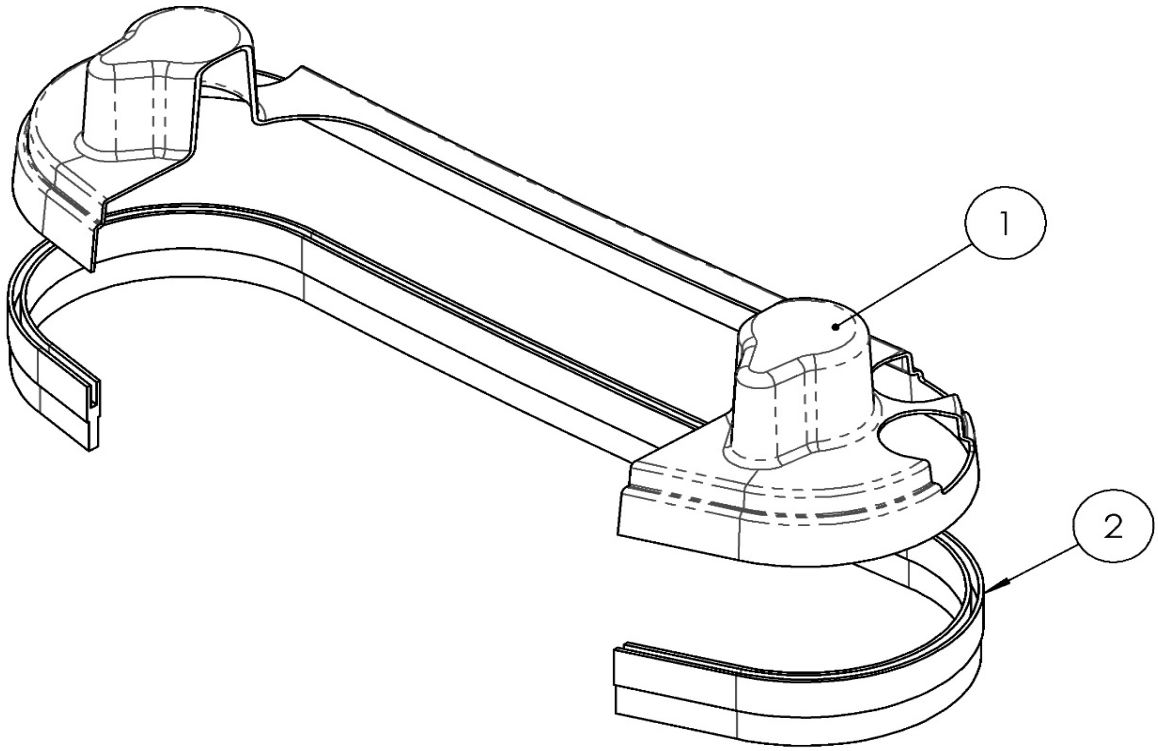

ID	Part number	Description	Quantity	
1	FSC0120	Splashguard	1	
2	FSC0410	Brislted profile	1	
	FSC0950	Splashguard assembly 700mm	1	£ 225.45

2.0	FSC0960	Squeegee assembly - 700mm	SD50

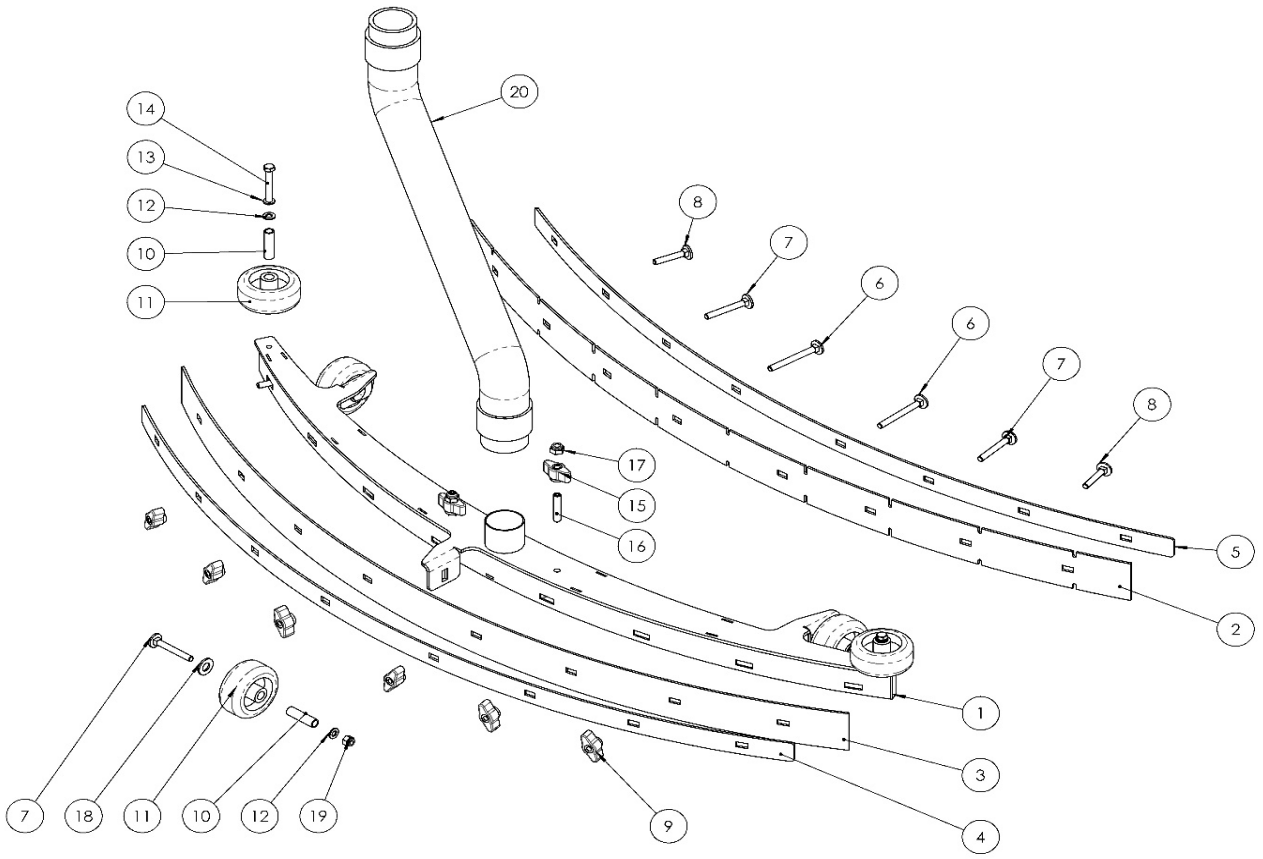

ID	Part number	Description	Quantity	
1	FSC1680	Squeegee 5070	1	
2	FSC0430	Squeegee front lip 5070	1	
2	FSC0420	Squeegee front lip 5070 - oil resistant - optional	1	
3	FSC0440	Squeegee rear lip 5070	1	
3	FSC0450	Squeegee rear lip 5070 - oil resistant - optional	1	
4	FSC1700	Rear lip holder 5070	1	
5	FSC1690	Front lip holder 5070	1	
6	FSC0630	Ground anchor screw M5x50	2	
7	FSC0640	Ground anchor screw M5x40	5	
8	FSC0650	Ground anchor screw M5x30	3	
9	FSC0550	Wingnut M5	6	
10	FSC0620	Spacer 8x6x28.5	5	
11	FSC0230	Wheel d.50x24	5	
12	FSC0240	Washer d.5	5	
13	FSC0200	Grower washer d.5	2	
14	FSC0830	Hexagon screw M5x35	2	
15	FSC0560	Wingnut M6	2	
16	FSC0390	Screw without head M6x30	2	
17	FSC0300	Selflocking nut M6	2	
18	FSC0130	Washer d.8	3	
19	FSC0220	Selflocking nut M5	3	
20	FSC0500	Squeegee hose	1	
	FSC0960	**Squeegee assembly - 700mm**		**£567.80**

Pos.20 & oil-resistant blades excluded

2.0	FSC0490	Tanks assembly	SD50

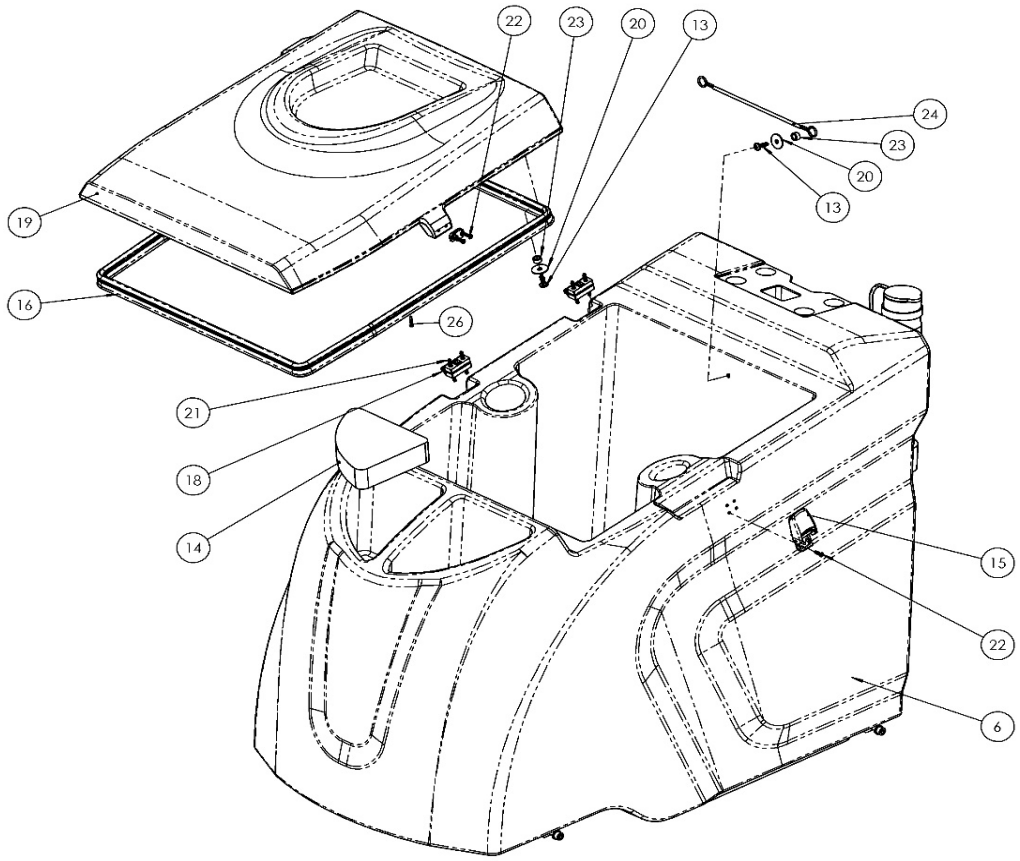

ID	Part number	Description	Quantity	
1	FSC0630	Tank - 40 litres	1	
2	FSC0060	Elbow dn.6	2	
3	FSC0080	Tank gasket	2	
4	FSC0550	Water level hose	1	
5	FSC0510	Water level sensor	1	
6	FSC0510	Drain hose	1	
7	FSC0340	Metal clamp 32x50	1	
8	FSC0120	Suction hose connector	1	
9	FSC0690	Screw TC 4x16	9	
10	FSC0130	Squegeee hose connector	1	
11	FSC0280	Wire Mount 3/8"	3	
12	FSC0990	Tank fixing plate	4	
13	FSC0710	Screw TC 5x16	9	
14	FSC0280	Filling water filter	1	
15	FSC0630	Closure hook	1	
16	FSC0270	Cap gasket	1	
17	FSC0970	Counterweight	1	
18	FSC0620	Hinge	2	
19	FSC0650	Cap 40 litres	1	
20	FSC0190	Washer 5x20	5	
21	FSC0750	Screw TS 4x18	8	
22	FSC0740	Screw TS 3x12 - A2	6	
23	FSC0270	Spacer 6.2x10x5	2	
24	FSC0300	Stainless steel cable	1	
25	FSC0100	Elbow "L" 3/8" conic d.12	1	
26	FSC0500	Self-threading screw 2,2x13	10	
27	FSC0160	Washer 6	4	
28	FSC0820	Hexagon screw M6x30	4	

2.0	FSC0490	Tanks assembly	SD50

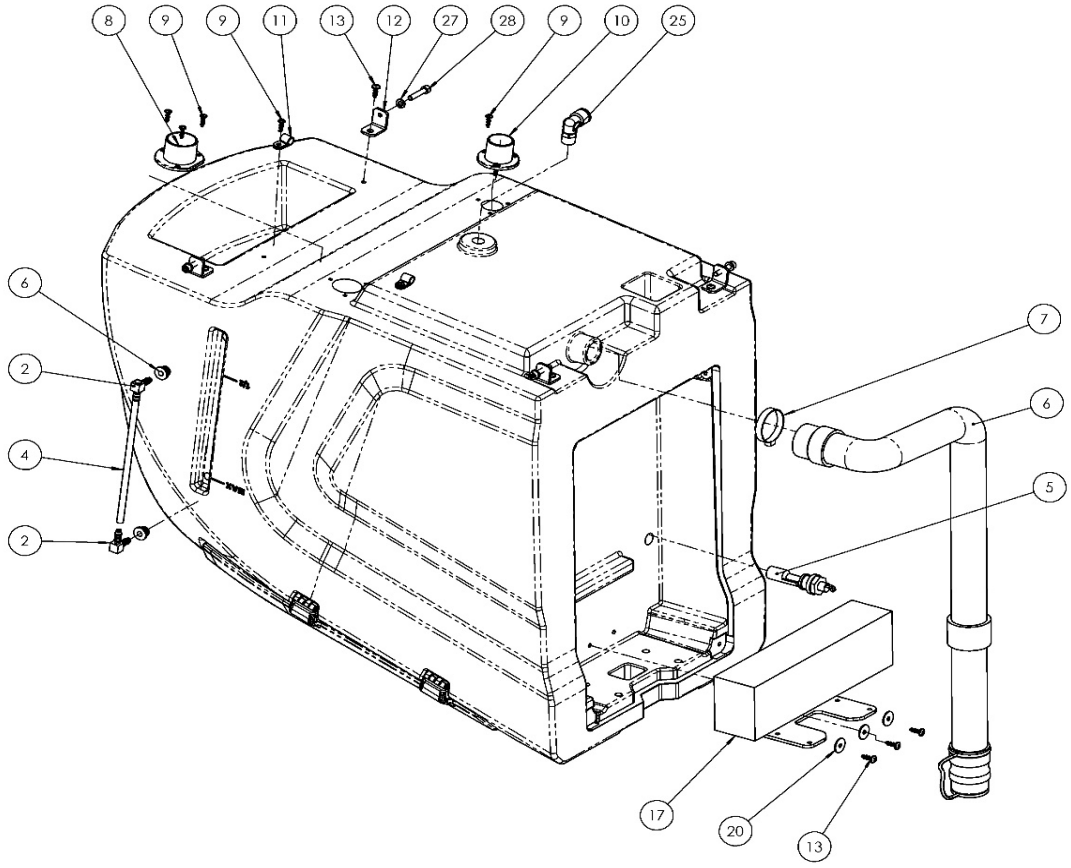

ID	Part number	Description	Quantity	
1	FSC0630	Tank - 40 litres	1	
2	FSC0060	Elbow dn.6	2	
3	FSC0080	Tank gasket	2	
4	FSC0550	Water level hose	1	
5	FSC0510	Water level sensor	1	
6	FSC0510	Drain hose	1	
7	FSC0340	Metal clamp 32x50	1	
8	FSC0120	Suction hose connector	1	
9	FSC0690	Screw TC 4x16	9	
10	FSC0130	Squegeee hose connector	1	
11	FSC0280	Wire Mount 3/8"	3	
12	FSC0990	Tank fixing plate	4	
13	FSC0710	Screw TC 5x16	9	
14	FSC0280	Filling water filter	1	
15	FSC0630	Closure hook	1	
16	FSC0270	Cap gasket	1	
17	FSC0970	Counterweight	1	
18	FSC0620	Hinge	2	
19	FSC0650	Cap 40 litres	1	
20	FSC0190	Washer 5x20	5	
21	FSC0750	Screw TS 4x18	8	
22	FSC0740	Screw TS 3x12 - A2	6	
23	FSC0270	Spacer 6.2x10x5	2	
24	FSC0300	Stainless steel cable	1	
25	FSC0100	Elbow "L" 3/8" conic d.12	1	
26	FSC0500	Self-threading screw 2,2x13	10	
27	FSC0160	Washer 6	4	
28	FSC0820	Hexagon screw M6x30	4	

2.0	FSC1260	Air suction filter assembly	SD50

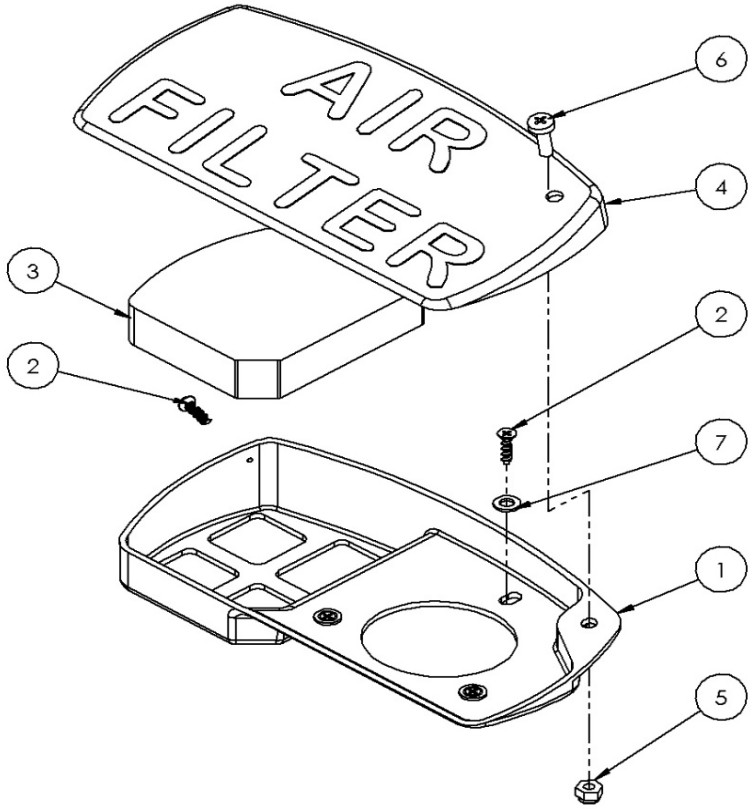

ID	Part number	Description	Quantity	
1	FSC0220	Air filter holder	1	
2	FSC0740	Screw TS 3x12 - A2	2	
3	FSC0540	Air filter	2	
4	FSC0230	Air fiter cover	1	
5	FSC0930	Selflocking nut M4	2	
6	FSC0980	Philips pan head screws M4x12 A2	3	
7	FSC0070	Washer d.4	4	
	FSC1260	**Air suction filter assembly**	**1**	

2.0	FSC0460	Handle assembly	SD50

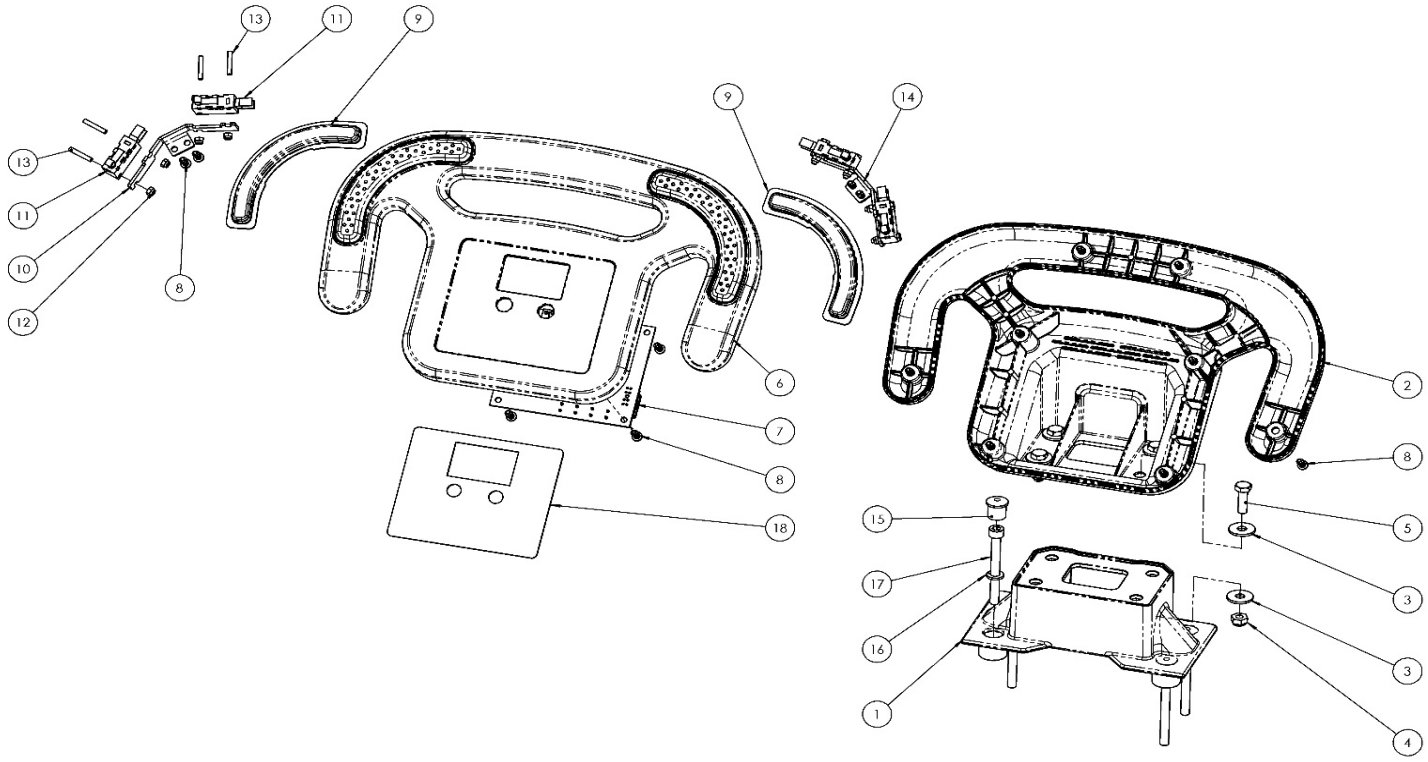

ID	Part number	Description	Quantity	
1	FSC0140	Handle base	1	
2	FSC0100	Handle, lower part	1	
3	FSC0400	Washer large 6x18 A2	8	
4	FSC0300	Selflocking nut M6	4	
5	FSC0150	Hexagon screw M6x20	4	
6	FSC0090	Handle, upper part	1	
7	FSC0630	SD50 mainboard	1	
8	FSC0680	Screw for plastic TC 4x12 - A2	16	
9	FSC0110	Brush activation lever	2	
10	FSC1060	Microswith holder - left side	1	
11	FSC0040	Microswith	4	
12	FSC0260	Selflocking nut M3	8	
13	FSC0840	Hexagon screw M3x18	8	
14	FSC1070	Microswith holder - right side	1	
15	FSC0670	Black cap	4	
16	FSC0060	Grower washer d.6	4	
17	FSC0410	Hexagon screw M6x40	4	
18	FSC0251	Operator panel adhesive SD50	1	

2.0	FSC0430	Lithium Battery pack 48V 11,3A	SD50

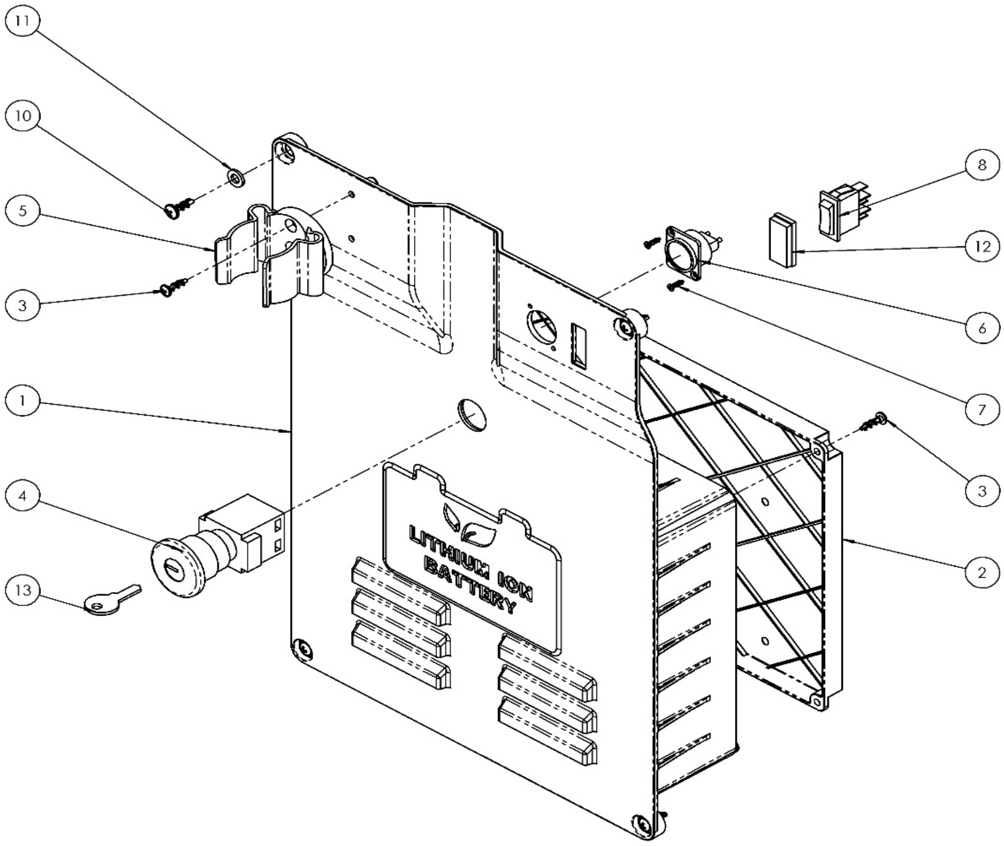

ID	Part number	Description	Quantity	
1	FSC0070	Battery holder	1	
2	FSC0080	Battery cover	1	
3	FSC0690	Screw TC 4x16	6	
4	FSC0680	Emergency push button	1	
5	FSC0080	Hose support 39-43	1	
6	FSC0650	Battery charger plug	1	
7	FSC0730	Screw for plastic TS 2.5x10	2	
8	FSC0660	Momentary switch 0-1	1	
9	FSC0670	Cable locker PG 13.5	1	
10	FSC0710	Screw TC 5x16	4	
11	FSC0160	Washer 6	4	
12	FSC0710	Switch cover	1	
13	FSC0790	Key for mushroom push button	1	
	FSC0430	**Lithium Battery pack 48V 11,3A**	**1**	**£1664.99**
	FSC0750	**Battery charger 110/230V - 50/60Hz**	**1**	**300,00**

2.0	FSC0440	Lithium Battery pack 48V 20,6A	SD50

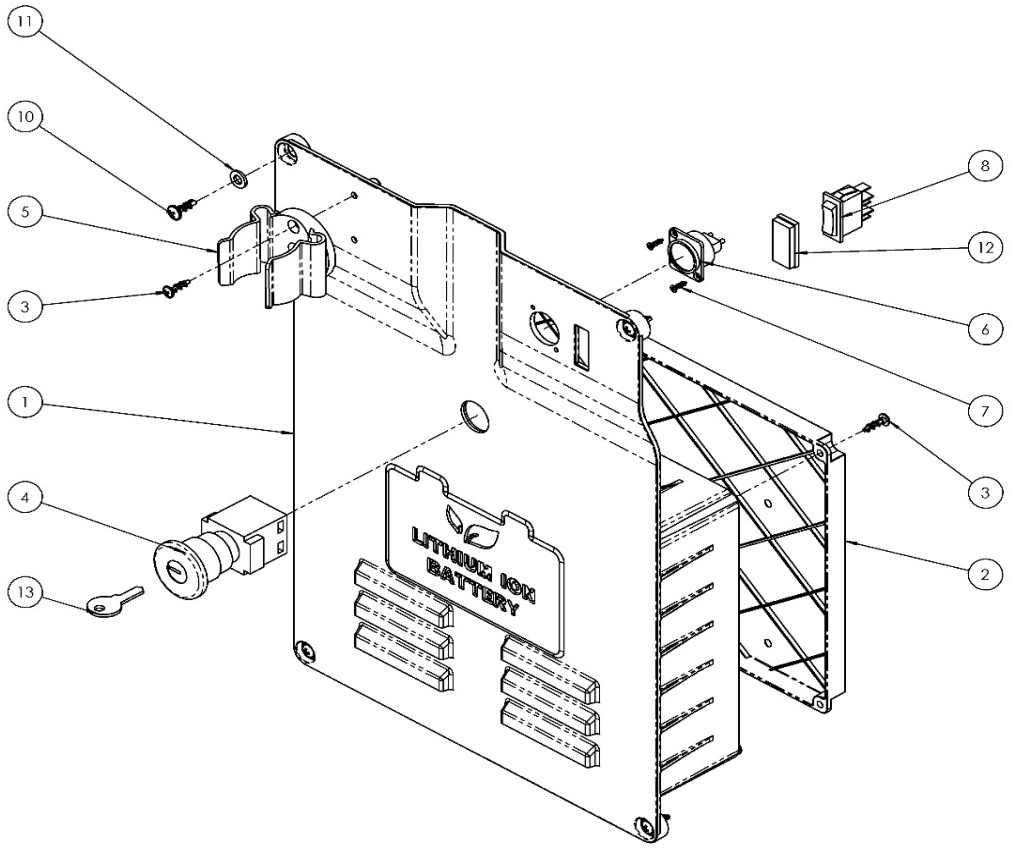

ID	Part number	Description	Quantity	
1	FSC0070	Battery holder	1	
2	FSC0080	Battery cover	1	
3	FSC0690	Screw TC 4x16	6	
4	FSC0680	Emergency pushbutton	1	
5	FSC0080	Hose support 39-43	1	
6	FSC0650	Battery charger plug	1	
7	FSC0730	Screw for plastic TS 2.5x10	2	
8	FSC0660	Momentary switch 0-1	1	
9	FSC0670	Cable locker PG 13.5	1	
10	FSC0710	Screw TC 5x16	4	
11	FSC0160	Washer 6	4	
12	FSC0710	Switch cover	1	
13	FSC0790	Key for mushroom pushbutton	1	
	FSC0440	**Lithium Battery pack 48V 20,6A**	**1**	**£2666.97**
	FSC0750	**Battery charger 110/230V - 50/60Hz**	**1**	**300,00**

2.0	FSC0810	Switching assembly 110-230Vac | 48Vdc 17Amps	SD50

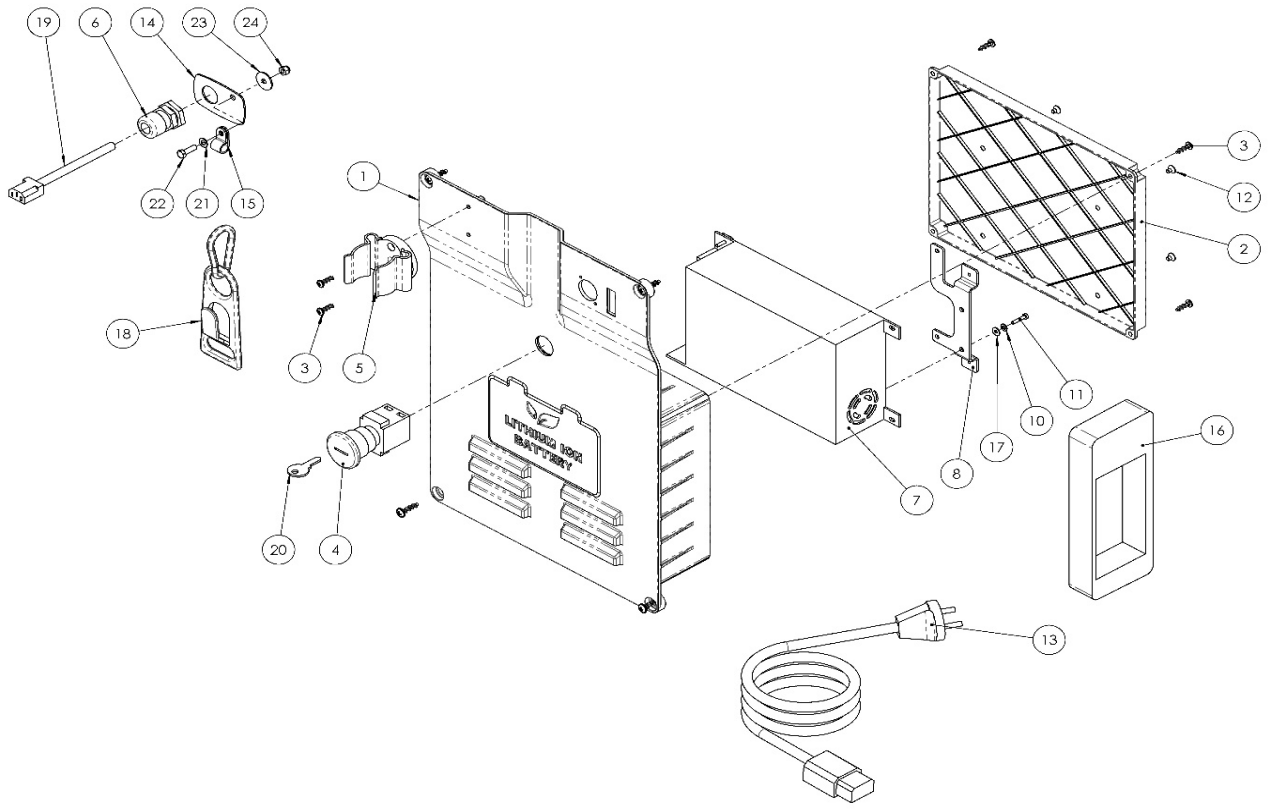

ID	Part number	Description	Quantity	
1	FSC0070	Battery holder	1	
2	FSC0080	Battery cover	1	
3	FSC0690	Screw TC 4x16	6	
4	FSC0680	Emergency pushbutton	1	
5	FSC0080	Hose support 39-43	1	
6	FSC0670	Cable locker PG 13.5	2	
7	FSC0890	Switching power supply 48VDC-17A	1	
8	FSC1500	Power switching holder	2	
9	FSC0710	Screw TC 5x16	4	
10	FSC0050	Spring washer d.4	3	
11	FSC0840	Hexagon screw M3x18	3	
12	FSC0900	Countersunk screw M4x6	4	
13	FSC0720	Power cord L=15m + IEC plug + Schuko plug	1	
14	FSC1430	Tearproof plate	1	
15	FSC0280	Wire Mount 3/8"	1	
16	FSC0550	Gasket for switching	1	
17	FSC0280	Washer 3x9	3	
18	FSC0880	Tearproof set	1	
19	FSC0800	Power cord L=330mm + IEC plug	1	
20	FSC0790	Key for mushroom pushbutton	1	
21	FSC0240	Washer d.5	1	
22	FSC0210	Hexagon screw M5x16	1	
23	FSC0190	Washer 5x20	1	
24	FSC0220	Selflocking nut M5	1	
	FSC0810	**Switching assembly 110-230Vac | 48Vdc 17Amps**	**1**	

2.0		SD50

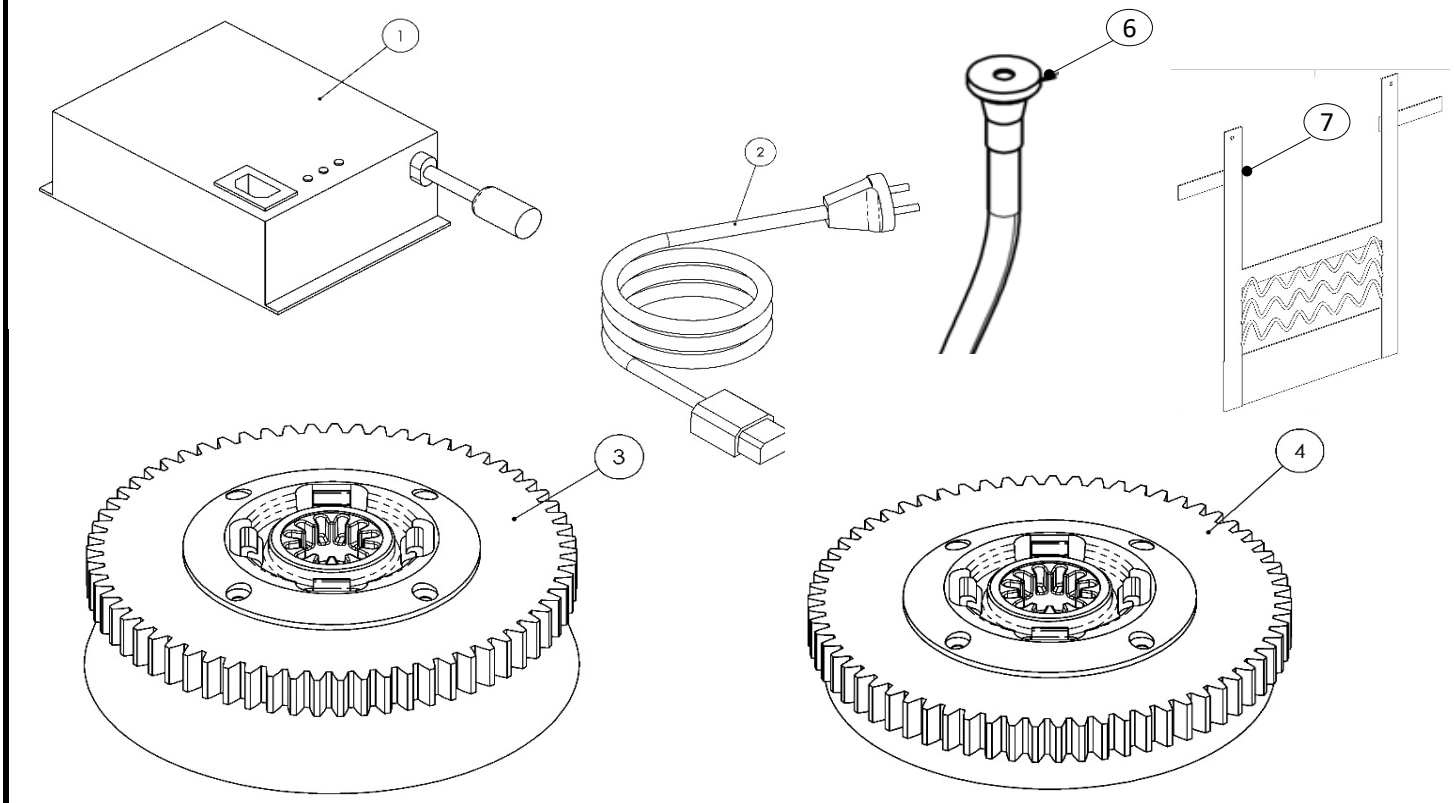

ID	Part number	Description	Quantity	
1	FSC0750	Battery charger 110/230V - 50/60Hz	1	
2	FSC0300	IEC cable with Schuko plug; 2 meters	1	
2	FSC0310	IEC cable with UK plug; 2 meters	1	
2	FSC0320	IEC cable with UL /USA plug; 2 meters	1	
2	FSC0330	IEC cable with JAPAN plug; 2 meters	1	
2	FSC0340	IEC cable with Korea plug; 2 meters	1	
2	FSC0350	IEC cable with Israele plug; 2 meters	1	
3	FSC0120	Toothed brush 7" - White 0,9mm PPL	4	
3	FSC0360	Toothed Brush 7" - Blue 0,7mm PPL	4	
3	FSC0370	Toothed Brush 7" - Black 0,5mm PPL	4	
3	FSC0380	Tynex brush 7" - Grit 320	4	
4	FSC0390	Toothed pad holder Ø 7"	4	
5	FSC0400	Nylon Pads 7" - Black	4	
5	FSC0410	Nylon Pads 7" - Green	4	
5	FSC0420	Nylon Pads 7" - Red	4	
5	FSC0430	Nylon Pads 7" - White	4	
6	FSC0140	Charging water hose (as std on H version)	1	
7	FSC0790	Net holder (as std on H version)	1	

2.0	FSC0520	Detergents dosing system for SD50	SD50

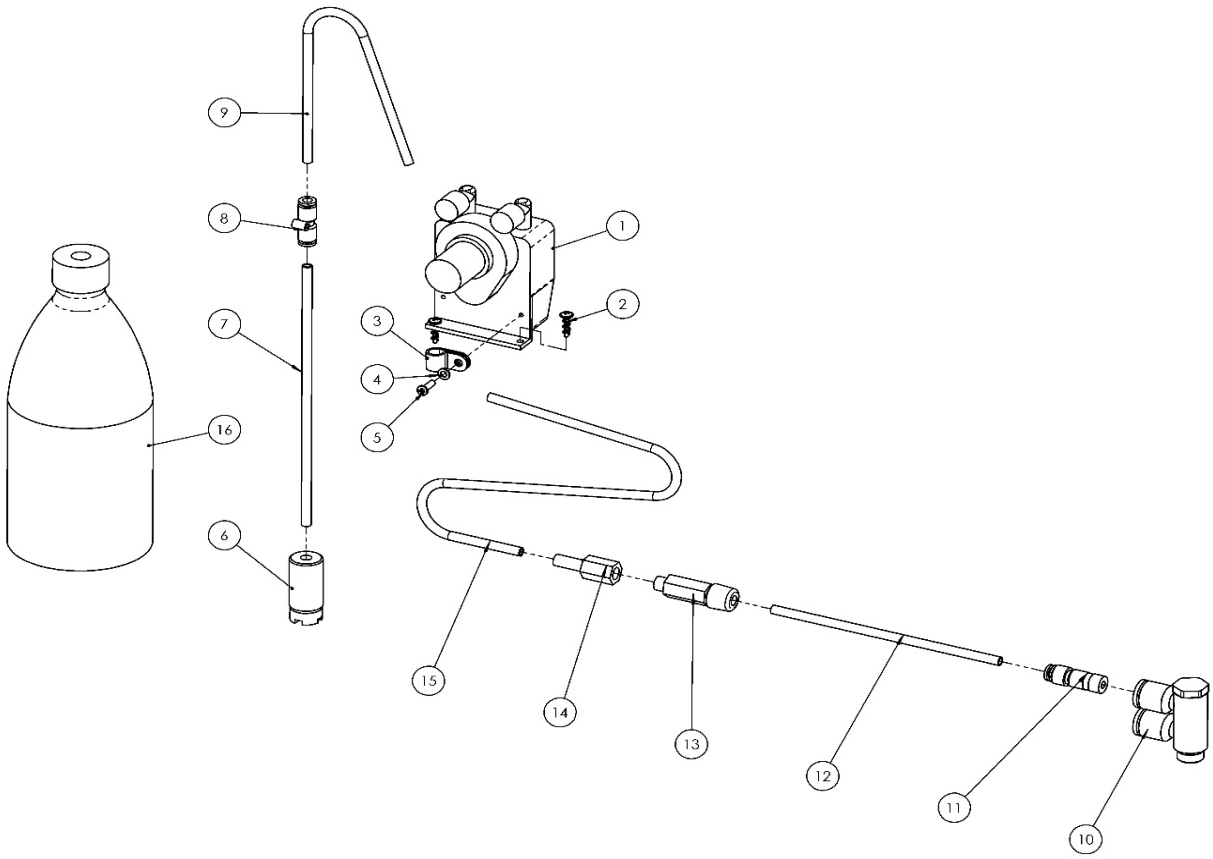

ID	Part number	Description	Quantity	
1	FSC0310	Detergent pump	1	
2	FSC0690	Screw TC 4x16	1	
3	FSC0280	Wire Mount 3/8"	1	
4	FSC0070	Washer d.4	1	
5	FSC0580	Self threated screw M3,9x13	1	
6	FSC0320	Suction filter+ ceramic weight	1	
7	FSC0780	Detergents suction hose, short	1	
8	FSC0770	Straight fitting intermediate ø6-6	1	
9	FSC0790	Detergents suction hose, short	1	
10	FSC0760	Dual rod elbow - swivel - 3/8" 12	1	
11	FSC0470	Reducer DN12-6	1	
12	FSC0450	Detergents outlet hose, short	1	
13	FSC0350	One way valve for detergent	1	
14	FSC0370	Elbow female 1/8"	1	
15	FSC0800	Detergents outlet hose, long	1	
16	FSC0580	Empty detergent bottle	1	